ARK
Room 1303-4,13/F, Block A, Seaview Estate, 2 Watson Road, North Point Hong Kong T 26336383 F 26330933

SPECIFICATION OF TYPICAL UNIT AND SPECIAL UNIT KITCHEN APPLIANCE

PROJECT:	**TYPICAL UNIT & SPECIAL UNIT FOR 7-9 PING LAN STREET, AP LEI CHAU**
CLIENT:	**WANG ON**
CLIENT:	**WANG ON**
JOB NO:	I215
DATE:	2025.02.21
REVISION:	-

ARK
Room 1303-4,13/F, Block A, Seaview Estate, 2 Watson Road, North Point Hong Kong T 26336383 F 26330933

KITCHEN APPLIANCE SCHEDULE	**Project:** 7-9 PING LAN STREET, AP LEI CHAU TYPICAL UNIT & SPECIAL UNIT **Client:** WANG ON **Job No:** I215 **Date:** 25.02.21

KITCHEN APPLIANCE CODE: AP-01

SUPPLIER: GILMAN GROUP LTD. **CONTACT:** Leo leung **T:** 2418 3234 **M:** 9031 6018 **F:** 2420 4273 **E:** leoleung@gilman-group.com	**ITEM:** 30CM 2-ZONE INDUCTION HOB **ORIGIN:** - **MODEL**: "DE DIETRICH" DPI7361XH **COLOR:** - **DIMENSION:** REFER TO DIAGRAM **FINISH:** - **LEAD TIME:** -

LOCATION: KITCHEN

Product Image:

De Dietrich

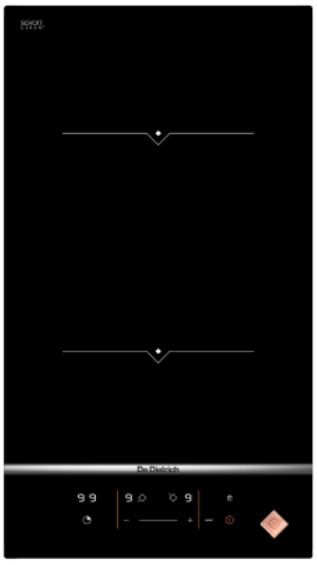

Supplier should submit samples or equivalent for Designer approval before ordering/ construction. Contractor to check and verify materials delivery schedule.

DPI7361XH
30CM 2 ZONE INDUCTION HOB

- 2 independent zones

Front:	18cm	2400 / 2600W
Rear:	18cm	2400 / 2600W
Total hob power:		3500W

- Touch Control + Slider
- 2 boosters
- 99 minutes timer
- 9 power levels per zone
- White LED display
- Residual heat alert
- Child safety lock
- Automatic safety switch off
- Mandatory EEL Grade 1 or 2
- Made in Spain
- Dimensions

Product (in mm) : 290(W) x 520(D) x 70(H)
Cutout (in mm) : 277(W) x 500(D) X 64(H)

Revision	Date	Revision	Date

ARK
Room 1303-4,13/F, Block A, Seaview Estate, 2 Watson Road, North Point Hong Kong T 26336383 F 26330933

KITCHEN APPLIANCE SCHEDULE	**Project:** 7-9 PING LAN STREET, AP LEI CHAU TYPICAL UNIT & SPECIAL UNIT **Client:** WANG ON **Job No:** I215 **Date:** 25.02.21

KITCHEN APPLIANCE CODE: AP-01A

SUPPLIER: GILMAN GROUP LTD. **CONTACT:** Leo leung **T:** 2418 3234 **M:** 9031 6018 **F:** 2420 4273 **E:** leoleung@gilman-group.com	**ITEM:** 38CM HORIZONE DOMINO INDUCTION HOB **ORIGIN:** - **MODEL**: "DE DIETRICH" DPI7469XS+DAI7003S **COLOR:** - **DIMENSION:** REFER TO DIAGRAM **FINISH:** - **LEAD TIME:** -

LOCATION: SPECIAL UNIT KITCHEN

Product Image:

Supplier should submit samples or equivalent for Designer approval before ordering/ construction. Contractor to check and verify materials delivery schedule.

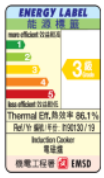

DAI7003S

38CM HoriZone DOMINO INDUCTION HOB DPI7469XS

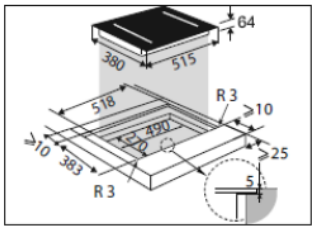

- Intelligent touch control
- 2 independent zones
  HoriZone: 40cm x 23cm
- Total hob power: 4600W
- 4 Direct access to Boost
- 20 power levels per zone
- 2 boosters
- Boil function
- Recall Function
- 2 x 99 minutes independent timer
- Unique Concept: ***Sliding Technology***: functional accessories possibility (Optional)
- 10 safety features
- Clean Lock
- Made in France
- Rated power: 4600W; 220-240V; 50/60 Hz; 16A
- Length electrical supply cord: 130cm
- Energy Efficiency Class (HK): Grade 3
- Dimension: 380W x 515D x 68H mm
- Built-in Dimension : 270W x 490D mm

Revision	Date	Revision	Date

ARK
Room 1303-4,13/F, Block A, Seaview Estate, 2 Watson Road, North Point Hong Kong T 26336383 F 26330933

KITCHEN APPLIANCE SCHEDULE	**Project:** 7-9 PING LAN STREET, AP LEI CHAU TYPICAL UNIT & SPECIAL UNIT **Client:** WANG ON **Job No:** I215 **Date:** 25.02.21

KITCHEN APPLIANCE CODE: AP-02

SUPPLIER: GILMAN GROUP LTD. **CONTACT:** Leo leung **T:** 2418 3275 **M:** 9858 4388 **F:** 2420 4273 **E:** jessicacheng@gilman-group.com	**ITEM:** TELESCOPIC COOKERHOOD **ORIGIN:** - **MODEL**: "DE DIETRICH" DHT6605X **COLOR:** - **DIMENSION:** REFER TO DIAGRAM **FINISH:** - **LEAD TIME:** -

LOCATION: KITCHEN

Product Image:

De Dietrich

DHT6605X
Telescopic Cookerhood

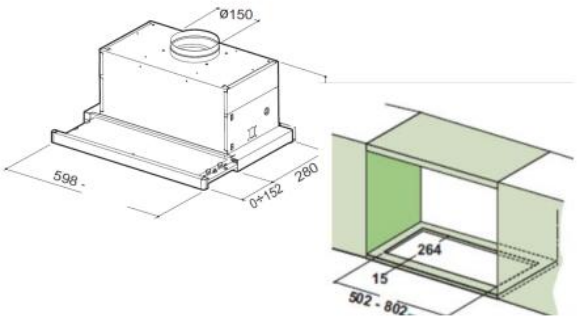

- 60cm Inox Colour
- Maximum Airflow Rate: 680m³ / Hr (EN61591)
- 3 + Boost Extraction Settings
- 1 Single Motor
- Electronic Touch Control
- 2 x LED Lamp
- 2 Aluminium Grease Filters
- Recirculation / Extraction Mode
- Optional Carbon Filter for recirculation
- Valve To Prevent Backflow
- Delayed Stop Function
- Made in Turkey
- Cable length : 1.15M

Dimensions:

Overall: 260H x 598W x 280D mm

Built in : 280H x 502W x 264D mm

Specification may subject to change without prior notice

Gilman since 1841

Revision	Date	Revision	Date

ARK
Room 1303-4,13/F, Block A, Seaview Estate, 2 Watson Road, North Point Hong Kong T 26336383 F 26330933

KITCHEN APPLIANCE SCHEDULE	**Project:** 7-9 PING LAN STREET, AP LEI CHAU TYPICAL UNIT & SPECIAL UNIT **Client:** WANG ON **Job No:** I215 **Date:** 25.02.21

KITCHEN APPLIANCE CODE: AP-03

SUPPLIER: GILMAN GROUP LTD. **CONTACT:** Leo leung **T:** 2418 3275 **M:** 9858 4388 **F:** 2420 4273 **E:** jessicacheng@gilman-group.com	**ITEM:** 45CM COMBI STEAM OVEN **ORIGIN:** - **MODEL**: "DE DIETRICH" DKR7580A **COLOR:** - **DIMENSION:** REFER TO DIAGRAM **FINISH:** - **LEAD TIME:** -

LOCATION: KITCHEN

Product Image:

De Dietrich

Supplier should submit samples or equivalent for Designer approval before ordering/ construction. Contractor to check and verify materials delivery schedule.

DKR7580A
45CM COMBI STEAM OVEN

- 41L Cavity
- Enameled cavity
- Pyrolytic Self Cleaning
- 4 Expert Steam Function + 8 Expert Function
- 60 pre-set recipe programmes for Conventional cooking
- 3135W Power connection
- Knob control with white illuminated LED display
- Water Tank 1L.
- European Energy Efficiency Class A
- Cable length 150cm
- Made in France

Dimensions
- Product (mm): 592W x 609D x 456H
- Built in (mm): 560W x 550D x 450H

ORIGINE FRANCE GARANTIE BVCert. 601825

Revision	Date	Revision	Date

ARK
Room 1303-4,13/F, Block A, Seaview Estate, 2 Watson Road, North Point Hong Kong T 26336383 F 26330933

KITCHEN APPLIANCE SCHEDULE	**Project:** 7-9 PING LAN STREET, AP LEI CHAU TYPICAL UNIT & SPECIAL UNIT **Client:** WANG ON **Job No:** I215 **Date:** 25.02.21

KITCHEN APPLIANCE CODE: AP-04

SUPPLIER: GILMAN GROUP LTD. **CONTACT:** Leo leung **T:** 2418 3275 **M:** 9858 4388 **F:** 2420 4273 **E:** jessicacheng@gilman-group.com	**ITEM:** BUILD-IN REFRIGERATOR **ORIGIN:** - **MODEL**: "DE DIETRICH" DRP1906JE **COLOR:** - **DIMENSION:** REFER TO DIAGRAM **FINISH:** - **LEAD TIME:** -

LOCATION: KITCHEN (1-Bedroom & 2-Bedrooms Unit)

Product Image:

De Dietrich

Supplier should submit samples or equivalent for Designer approval before ordering/ construction. Contractor to check and verify materials delivery schedule.

DRP1906JE
Built-in Refrigerator

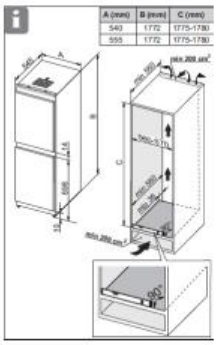

- Total Gross Capacity: 269L
- Total Net Capacity: 248L Fridge: 180L , Freezer: 68L
- T Climatic Class
- Electronic Thermostat
- LED Lighting
- Reversible Door
- Door on Door Installation
- Energy Efficiency Class (EU) : A++
- Energy Efficiency Class (HK) : Grade1
- Door Alarm
- Cable length: 200cm

Fridge

Super Cooling Function

Automatic Defrost

3°C Fresh Drawer

4°C Vegetable Drawer

Freezer

No Frost

Made in Serbia

Dimensions:

Overall: 1772H x 540W x 555D mm

Cutout: 1780H x 570W x 560D mm

Specifications may subject to change without prior notice

Gilman since 1841

Revision	Date	Revision	Date

ARK
Room 1303-4,13/F, Block A, Seaview Estate, 2 Watson Road, North Point Hong Kong T 26336383 F 26330933

KITCHEN APPLIANCE SCHEDULE	**Project:** 7-9 PING LAN STREET, AP LEI CHAU TYPICAL UNIT & SPECIAL UNIT **Client:** WANG ON **Job No:** I215 **Date:** 25.02.21

KITCHEN APPLIANCE CODE: AP-05

SUPPLIER: GILMAN GROUP LTD. **CONTACT:** Leo leung **T:** 2418 3275 **M:** 9858 4388 **F:** 2420 4273 **E:** jessicacheng@gilman-group.com	**ITEM:** BUILD-IN SINGLE DOOR FRIGE **ORIGIN:** - **MODEL**: "DE DIETRICH" DRS604MU1 **COLOR:** - **DIMENSION:** REFER TO DIAGRAM **FINISH:** - **LEAD TIME:** -

LOCATION: KITCHEN (Studio Unit)

Product Image:

Supplier should submit samples or equivalent for Designer approval before ordering/ construction. Contractor to check and verify materials delivery schedule.

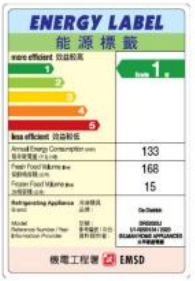

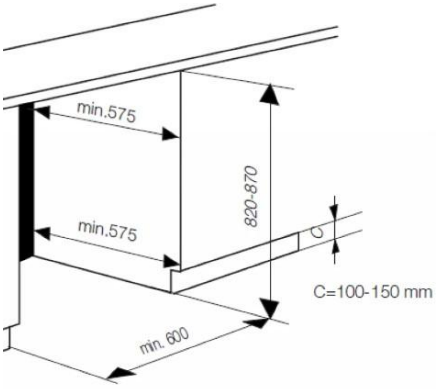

- Energy Efficiency Label: Level 1
- Dimensions: Height 820 mm X Width 598 mm X Depth 545 mm
- Opening size: Height 870 mm X Width 600 mm X Depth 575 mm
- Annual electricity consumption (kWh): 135
- Storage compartment volume (liters): 93
- Ice tray capacity (liter): 16

Country of origin	France	Number of Doors	1
Body volume - height (mm)	820	Freezer Capacity (L)	16
Body volume - width (mm)	598	Fridge Capacity (L)	93
Body volume - depth (mm)	545	Invertor Compressor	No
Style	Built-in Freezer	Digital Display	No
Capacity (L)	109	Door Hinge Direction	Right

Revision	Date	Revision	Date

ARK
Room 1303-4,13/F, Block A, Seaview Estate, 2 Watson Road, North Point Hong Kong T 26336383 F 26330933

KITCHEN APPLIANCE SCHEDULE	**Project:** 7-9 PING LAN STREET, AP LEI CHAU TYPICAL UNIT & SPECIAL UNIT **Client:** WANG ON **Job No:** I215 **Date:** 25.02.21

KITCHEN APPLIANCE CODE: AP-06

SUPPLIER: GILMAN GROUP LTD. **CONTACT:** Leo leung **T:** 2418 3275 **M:** 9858 4388 **F:** 2420 4273 **E:** jessicacheng@gilman-group.com	**ITEM:** BUILT-IN WASHER DRYER **ORIGIN:** - **MODEL**: "DE DIETRICH" DLZ8485U **COLOR:** - **DIMENSION:** REFER TO DIAGRAM **FINISH:** - **LEAD TIME:** -

LOCATION: STUDIO UNIT: AT KITCHEN; 1-BEDROOM & 2-BEDROOM UNIT: AT BALCONY

Product Image:

De Dietrich

Supplier should submit samples or equivalent for Designer approval before ordering/ construction. Contractor to check and verify materials delivery schedule.

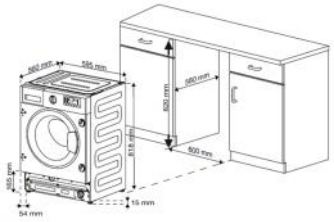

ProSmart Inverter Motor

DLZ8485U
Fully Integrated Washer Dryer

- 8 + 5Kg Wash and Dry
- Maximum Spin Speed : 1400rpm
- 10 + 5 Washing and Drying programmes
- ProSmart Inverter Motor
- Upto 24 hours delay start function
- Spin and Temperature Selection
- Stainless Steel Drum
- Safety Door Lock
- Made in Turkey
- Rated power connections : 2200 - 2350W
- Connection: 220 – 240V / 50Hz/ 13A
- Dimensions:

Actual : 818H x 595W x 560D mm

Cutout: 828H x 600W x 580D mm

Specifications may subject to change without prior notice

Gilman since 1841

Revision	Date	Revision	Date